Eureka
A division of A F Gason Pty Ltd
Wood & Gas Heating

# Duet Through Wall Kit
**(Part No. 214813)**

# Installation Instructions

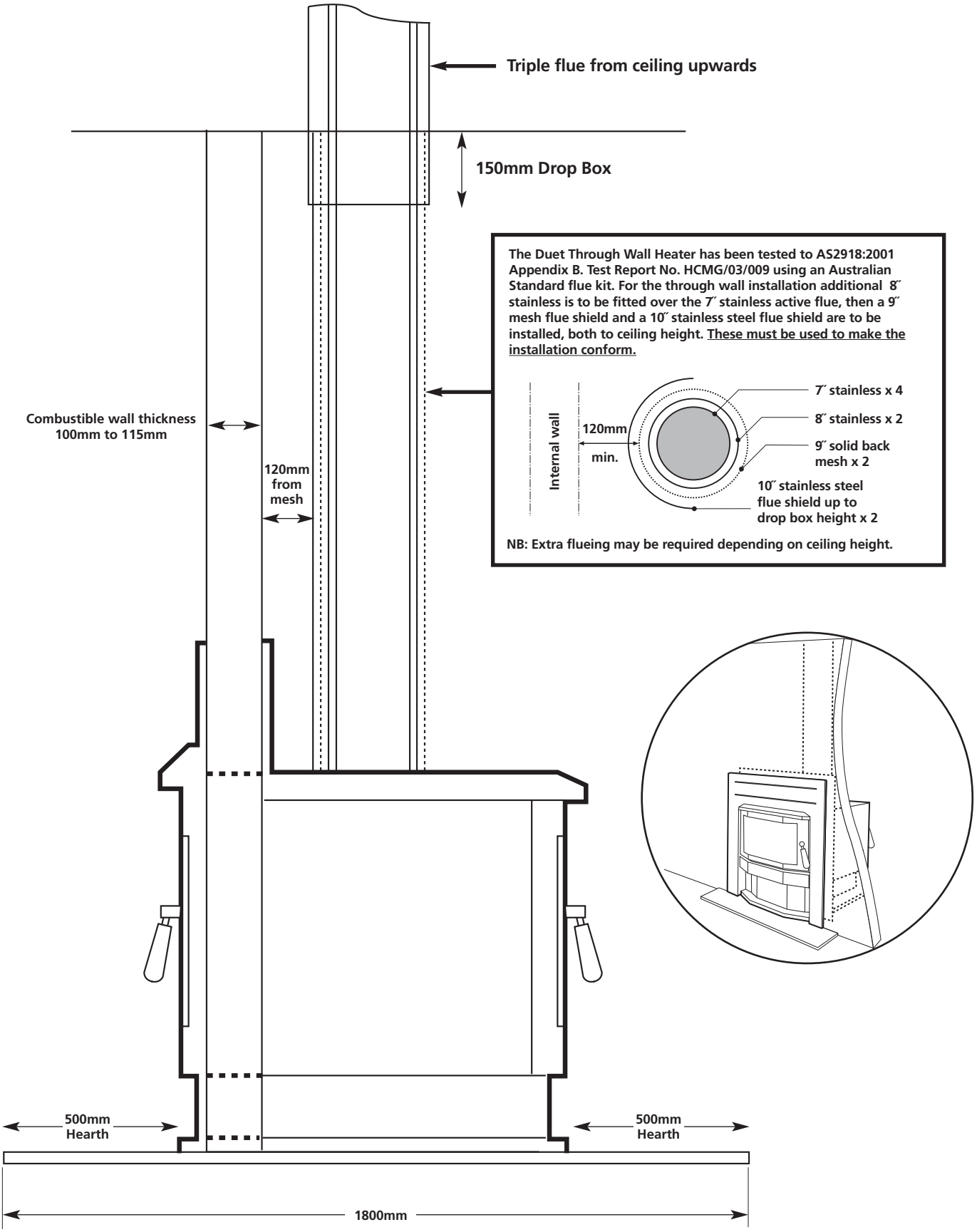


The Duet Through Wall Heater has been tested to AS2918:2001 Appendix B. Test Report No. HCMG/03/009 using an Australian Standard flue kit. For the through wall installation additional 8″ stainless is to be fitted over the 7″ stainless active flue, then a 9″ mesh flue shield and a 10″ stainless steel flue shield are to be installed, both to ceiling height. <u>These must be used to make the installation conform.</u>



NB: Extra flueing may be required depending on ceiling height.