INSERT & INBUILT WOOD FIRES

I2000 - AUSTRALIA

Descriptions	Item No.	MARKET	FUEL TYPE	FINISH	YEAR	FAN
Fire Box	984905	AU	HARDWOOD	Metallic Black VHT	DEC-2013	Yes
Fascia	984906					

OVER ALL SCHEMATIC FOR I2000 (AU) INBUILT COMPONENTS

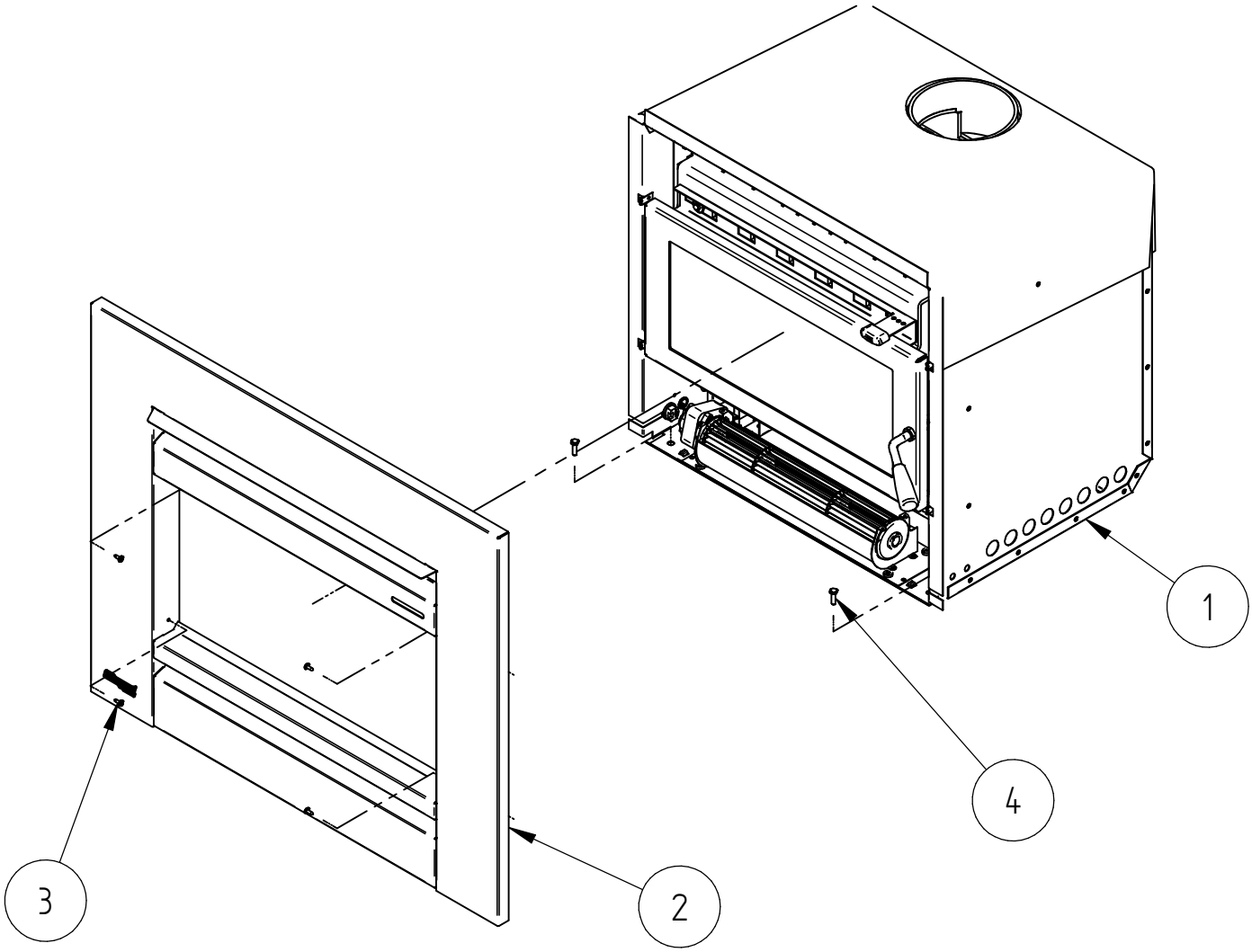

FASCIA AND FIRE BOX				
Item	Part ID	Model(s)	Descriptions	Qty
		984905		
1	984905	-	I2000 HW ASSEMBLY	1
2	984906	-	FASCIA I2000 AU 2013 MET BLK	1
3	521645	-	SCREW; S/T 8GX1/2" MUSH FLANGE POZI BLK	4
4	521054	-	SCREW; M6X20 HEX ZP	2

PANELS, DOOR AND PEDESTAL

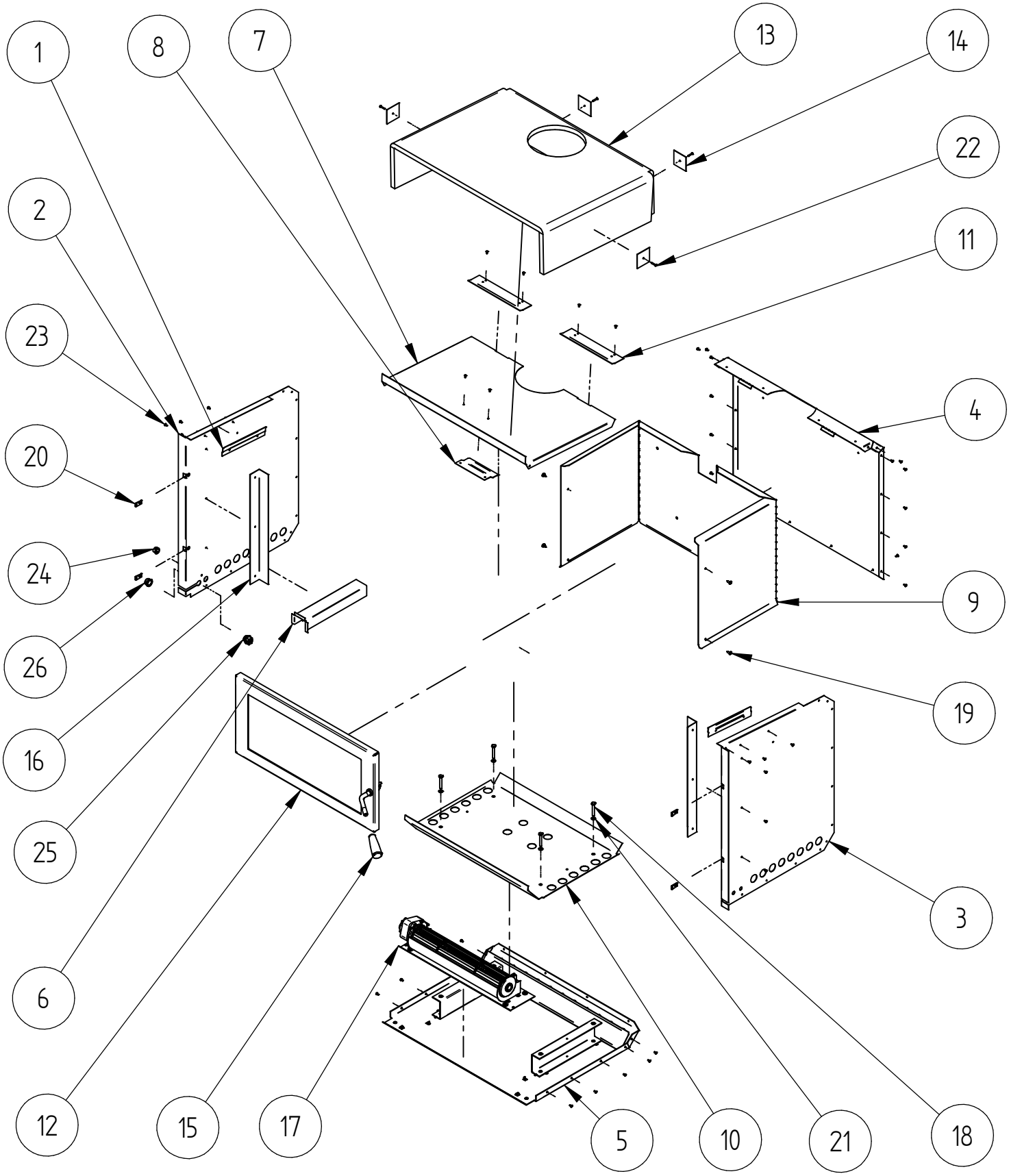

When ordering PLEASE QUOTE PART ID along with Finish Suffix (If applicable)

PANELS, DOOR AND PEDESTAL

Item	Part ID	Model(s)	Description	Qty
		984905		
1	986514	-	CASE OUTER, GUIDE RAIL LE	2
2	983411	-	CASE-OUTER,SIDE LH I2000	1
3	983412	-	CASE-OUTER,SIDE RH I2000	1
4	983417	-	CASE-OUTER, REAR I2000	1
5	983416	-	I2000 BASE ASSEMBLY	1
6	993296	-	SHIELD-LOOM, LE4	1
7	983410	-	CASE-OUTER TOP I2000	1
8	993543	-	I3000 Cabinet Top Clip	1
9	983451	-	HEATSHIELD WRAP I2000	1
10	983409	-	I2000 BASE HEAT SHIELD PANEL S/S	1
11	993525	-	I3000 CABINET JOINER PLATE	2
12	983431	-	I2000 DOOR ASSY COMPLETE	1
13	983453	-	I2000 FIBRE FRAX BLANKET	1
14	MIB00065	-	MIB CABINET WASHER	4
15	PYR00376	-	PYR DOOR HANDLE	1
16	983449	-	CAB STIFFENER I2000	2
17	983452	-	FAN ASSY 2 SP W/F I2000	1
18	521077	-	SCREW; M6X40 HEX ZP	4
19	521645	-	SCREW; S/T 8GX1/2" MUSH FLANGE POZI BLK	4
20	522400	-	NUT; SPIRE 8G BLK	4
21	523031	-	WASHER; FLAT M6 ZP	4
22	524004	-	RIVET; 73 AS 4-9	4
23	524008	-	RIVET; 73 MS 4-2	44
24	529400	-	GROMMET; PLASTIC 22-PLB16	1
25	529201	-	CLAMP; CABLE 16 LITTLE GRIPPER	1
26	522902	-	NUT; CABLE GRIPPER 800031	1

AIRSLIDE, BAFFLE, BRICKS AND FIREBOX

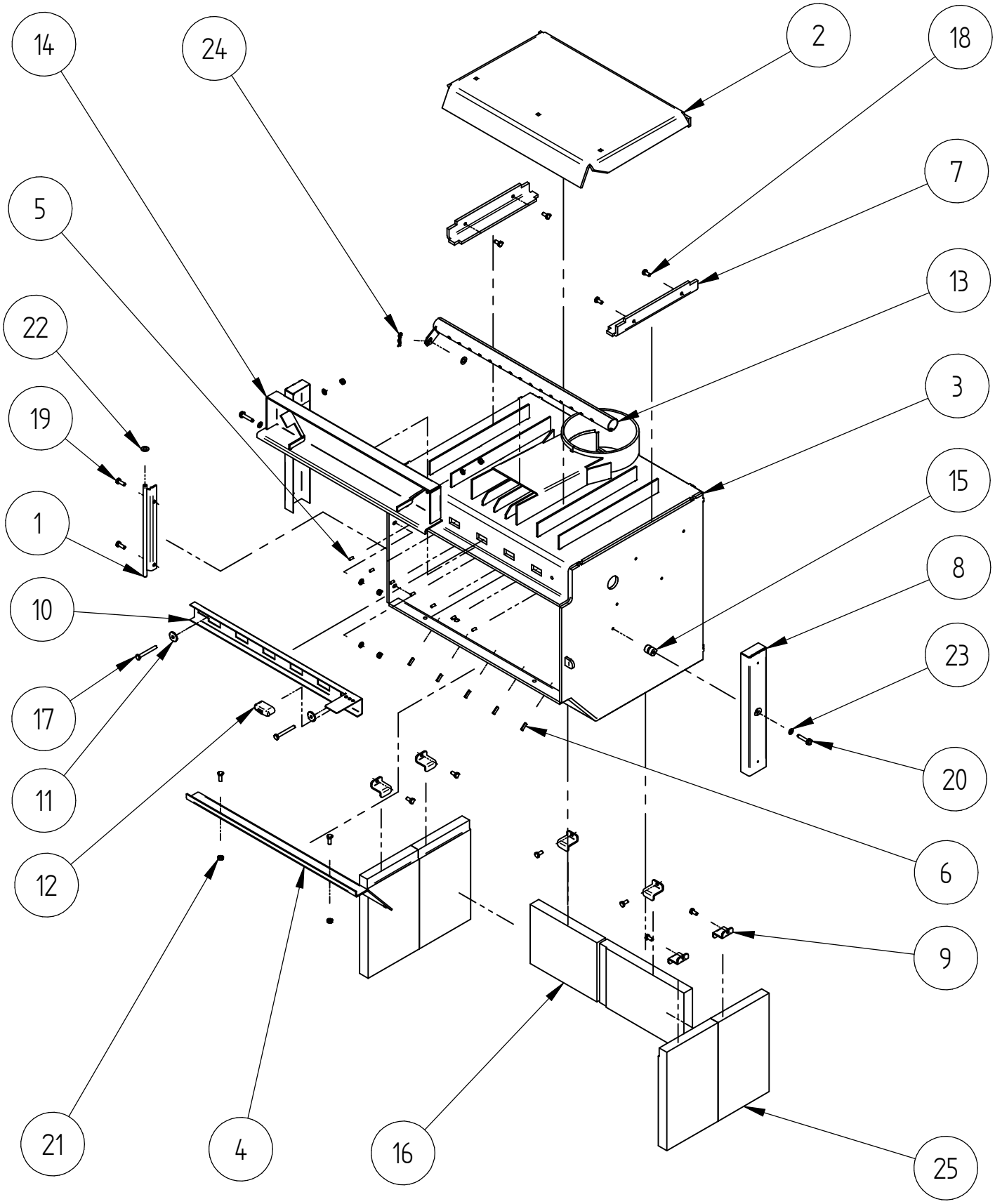

When ordering PLEASE QUOTE PART ID along with Finish Suffix (If applicable)

AIRSLIDE, BAFFLE, BRICKS AND FIREBOX				
Item	Part ID	Model(s)	Description	Qty
		984905		
1	MICAC190	-	MIC DOOR HINGE ASSEMBLY	1
2	983440	-	I2000 BAFFLE FINAL ASSY	1
3	983400	-	I2000 FIREBOX ASSY	1
4	983429	-	F/B BASE PLATE AIR INNER I2000	1
5	525002	-	PIN; TENSION 5X16 BLK	7
6	525002	-	PIN; TENSION 5X16 BLK	5
7	983227	-	R5000 BAFFLE SUPPORT	2
8	MIC00123	-	MIC SEC AIR CHANNEL	2
9	HBA00118	-	HBA BRICK RETAINER	6
10	983430	-	I2000 AIR SLIDE AUS	1
11	MIC00083	-	LOGAIRE METRO AIR SLIDE SPACER	2
12	593568	-	AIR SLIDE KNOB PUSH ON	1
13	983456	-	TUBE-SEC AIR ASSY, I2000 S/S	1
14	983222	-	AIR DEFLECTOR ASSY	1
15	HBA00129	-	HBA AIR DEFLECTOR SPACER	2
16	983455	-	I2000 REAR BRICK	1
17	521061	-	SCREW; M6X50 HEX ZP	2
18	521075	-	SCREW; M6X12 HEX ZP	10
19	521076	-	SCREW; M6X16 HEX ZP	4
20	521634	-	SCREW; S/T M6X30 HEX FLANGE ZP TAPTITE	2
21	522117	-	NUT; HEX STD M6 ZP	6
22	523019	-	WASHER; FLAT 5/16"X5/8"X16G ZP	2
23	523031	-	WASHER; FLAT M6 ZP	6
24	526101	-	CLIP; R-CLIP 1.8 DIA ST	1
25	MIC00354	-	MIC BRICK	5

FIREBOX DETAILS

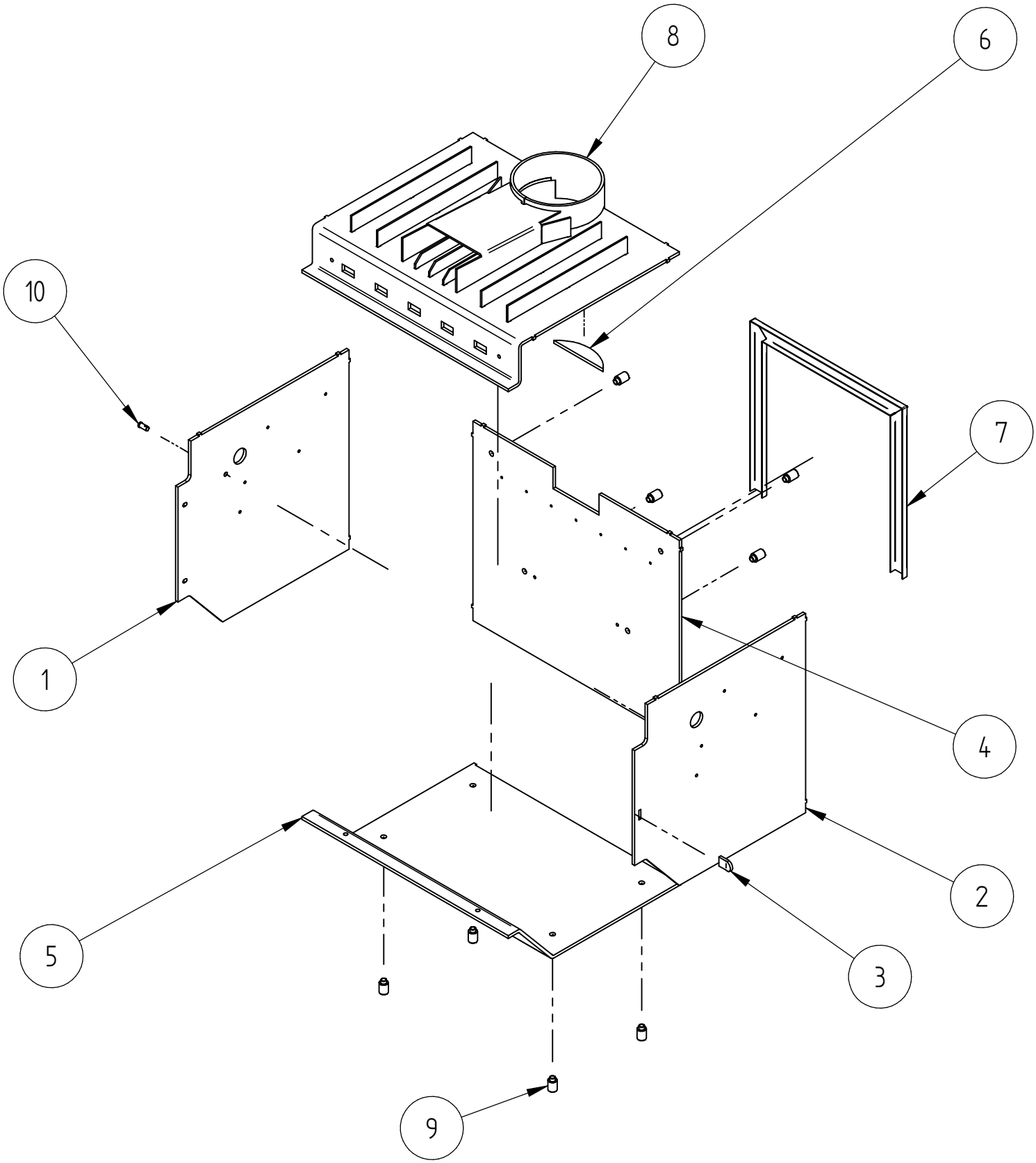

When ordering PLEASE QUOTE PART ID along with Finish Suffix (If applicable)

FIREBOX DETAILS: 983400				
Item	Part ID	Model(s)	Description	Qty
		984905		
1	983406	-	I2000 F/B LEFT HAND PANEL	1
2	983407	-	I2000 FIRE BOX SIDE PANEL R/H	1
3	983049	-	TAB-DOOR LATCH, OSB1600	1
4	983408	-	I2000 FIRE BOX REAR PANEL	1
5	983404	-	I2000 FIRE BOX BOTTOM AUS	1
6	983427	-	I2000 SPIGOT PLATE	1
7	983439	-	I2000 REAR AIR CHANNEL	1
8	983443	-	I2000 FI/B TOP ASSM	1
9	MET00429	-	FIREBOX BUSH - SPIGOTED	8
10	MIC00137	-	MIC AIRBAR PIN	1

DOOR ASSEMBLY

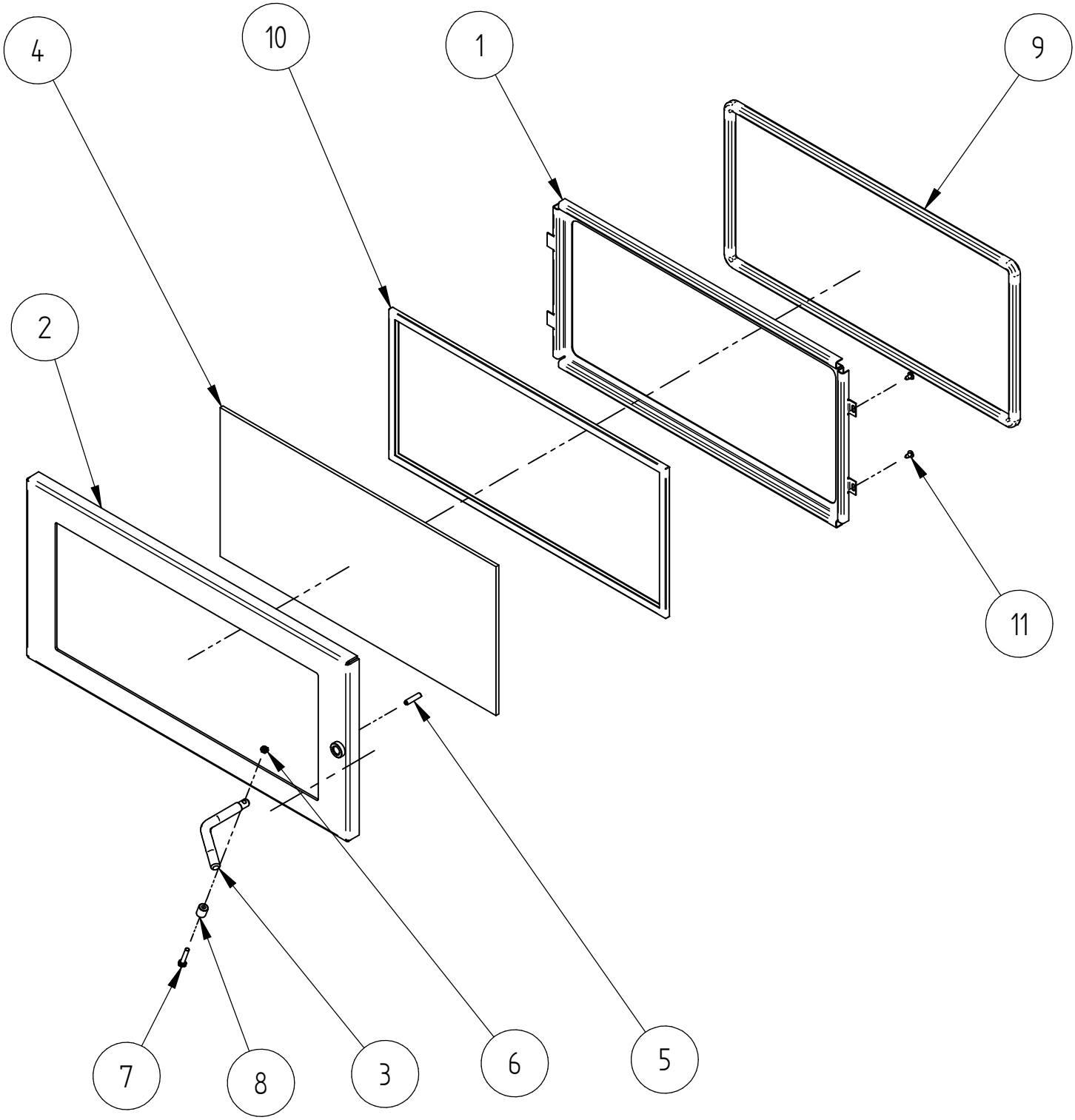

When ordering PLEASE QUOTE PART ID along with Finish Suffix (If applicable)

DOOR ASSEMBLY				
Item	Part ID	Model(s) 984905 983431	Description	Qty
1	PFS00034	-	PFS GLASS RETAINER	1
2	983432	V02	I2000 DOOR SUB ASSEMBLY	1
3	KRR00373	-	KRR DOOR LEVER	1
4	PFS00204	-	PFS GLASS	1
5	521704	-	SCREW; GRUB M6X25 ALLEN BLK	1
6	522901	-	NUT; BINX M5 ZP	1
7	521805	-	SCREW; CAP M5X25 ALLEN BLK	1
8	PYR00461	-	PYR HANDLE ROLLER	1
9	C14MMDR	-	DOOR ROPE 16MM X 50m ROLL (MTR)	1
10	C25MMLT	-	LADDER TAPE 25x3x50m ROLL (MTR)	1
11	521627	-	SCREW; S/T 8GX3/8" MUSH FLANGE POZI BLK	2

*Optional Sale Kit

FASCIA ASSEMBLY

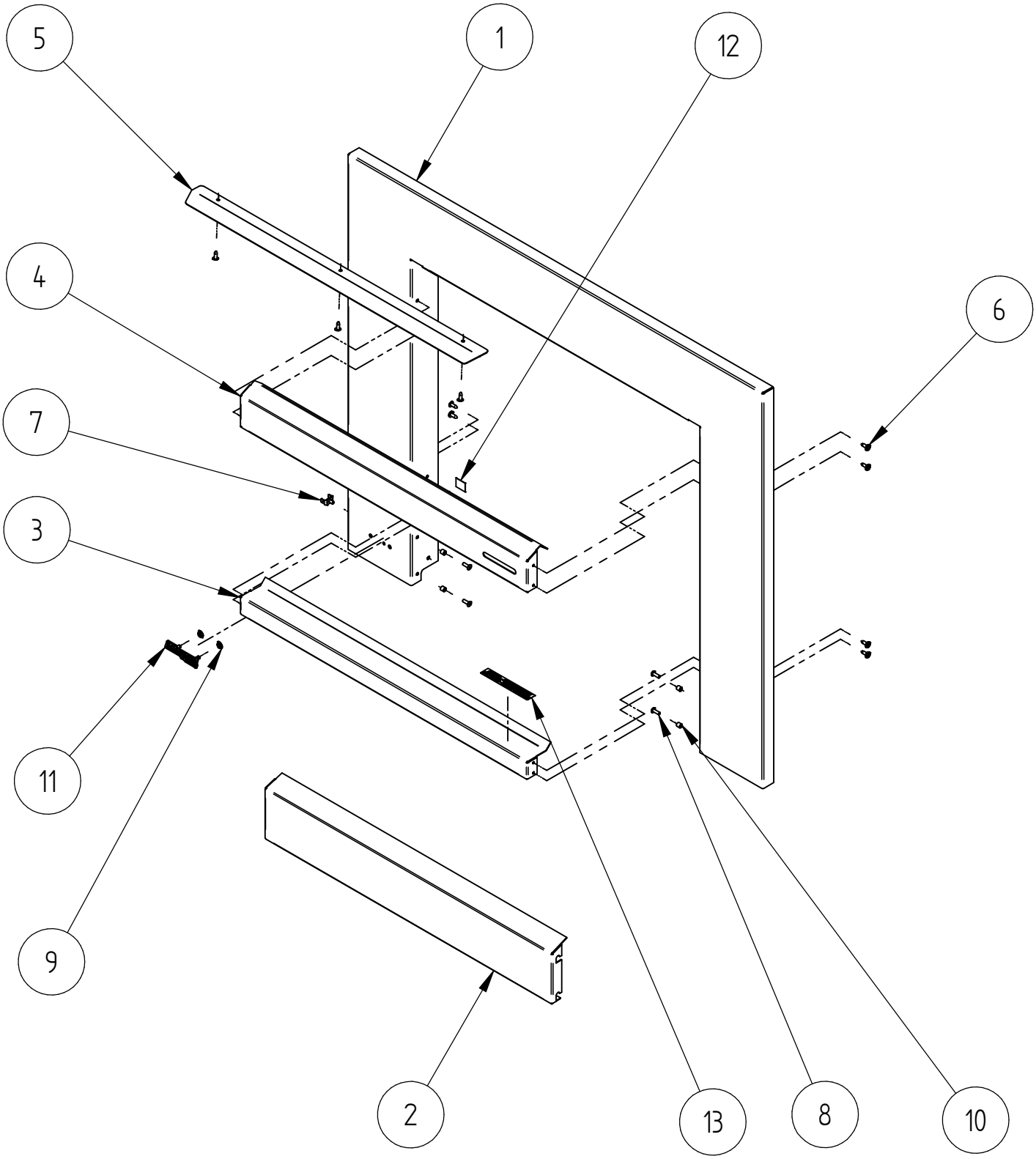

When ordering PLEASE QUOTE PART ID along with Finish Suffix (If applicable)

FASCIA ASSEMBLY: 984906				
Item	Part ID	Model(s)	Description	Qty
		984905		
1	983420	V02	I2000 FASCIA PANEL	1
2	983423	V02	I2000 FASCIA PANEL BOTTOM	1
3	983424	V02	I2000 FASCIA DOOR LIP	1
4	983422	V02	I2000 FASCIA TOP PANEL	1
5	983426	V02	I2000 FASCIA VENT DEFLECTOR	1
6	521645	-	SCREW; S/T 8GX1/2" MUSH FLANGE POZI BLK	11
7	596603	-	EARTH TAB RIVET BN11	1
8	524006	-	RIVET; 73 AS 5-5	4
9	526001	-	CLIP; STARLOCK 4 DIA SLP04	2
10	586148	-	SPACER-GRILLE - BLUE FINISH	4
11	587835	-	BADGE MASPORT HEATING	1
12	585631	-	DECAL EARTH	1
13	595695	-	DECAL "BURN ONLY" COMBINED NZ/AUS	1

FAN BOX ASSEMBLY

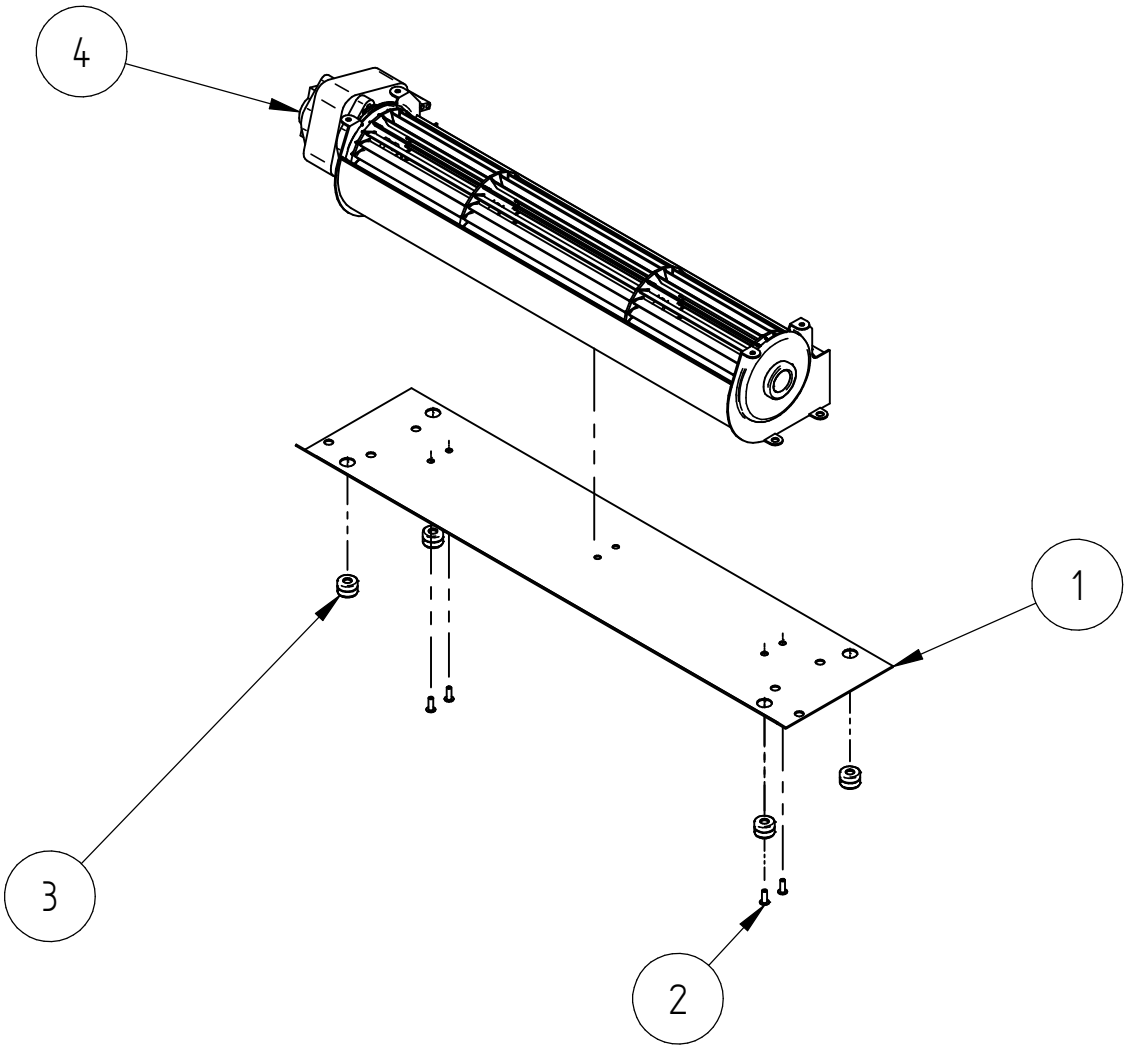

FAN BOX ASSEMBLY: 983452				
Item	Part ID	Model(s)	Description	Qty
		984905		
1	983437	-	I2000 FAN PLATE	1
2	524002	-	RIVET; 73 AS 4-3	6
3	529402	-	GROMMET; 14X6	4
4	593289	-	FAN-2 SP TANG W/F INB FERGAS 76082	1

When ordering PLEASE QUOTE PART ID along with Finish Suffix (If applicable)

FAN LOOOM DIAGRAM

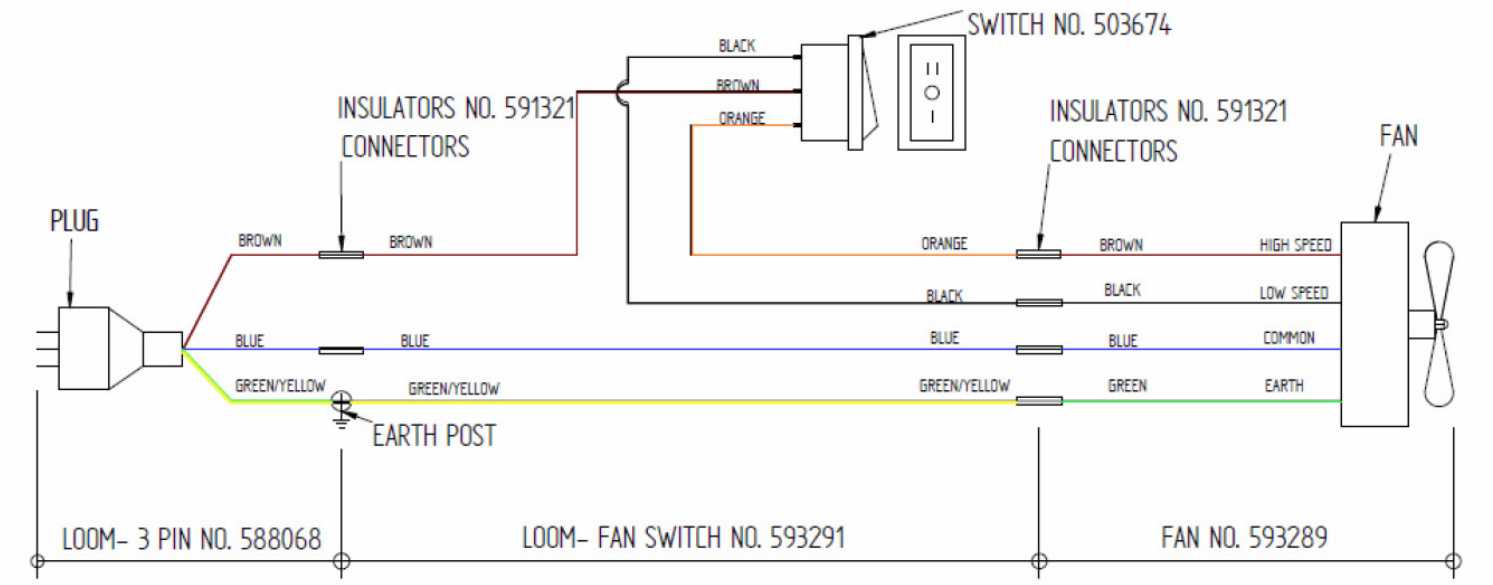

FAN WIRING DIAGRAM W/F FREESTANDING 2011 - 2013

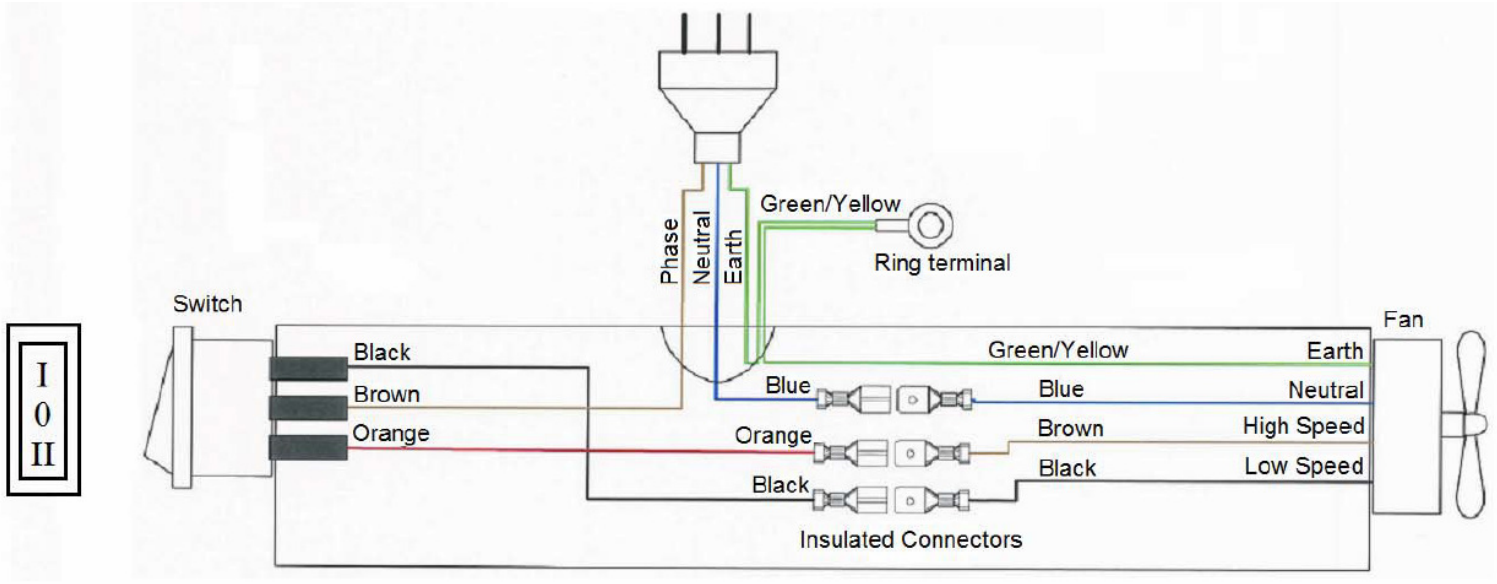

FAN WIRING DIAGRAM W/F FREESTANDING 2013 ONWARDS

NOT ILLUSTRATED				
Item	Part ID	Models	Descriptions	Qty
		984905		
1	593286	-	OWNER MANUAL WOODFIRES	1
2	593287	-	INSTALL MANUAL WOODFIRE	1
3	593699	-	INSTRUCT INSTALLATION I2000 INSERT AU	1
4	593690	-	INSTRUCT BRICK INSTALLATION I2000	1
5	593569	-	I2000 FASCIA INSTRUCTION	1

SURFACE FINISH CODES FOR PANELS

VITREOUS ENAMEL		VHT PAINT(Very High Temp)			POWDER COAT	
E01	MATT BLACK	V02	P-000022	METALLIC BLACK	P02	MATT BLACK
E02	GLOSS BLACK	V03	P-000043	CHARCOAL	P03	CHARCOAL
E03	CHARCOAL	V04	P-000081	TITANIUM	P05	SATIN BLACK
		V05	P-000051	CHARCOAL (DAM MET BLK)	P09	METTALIC BLACK
		V06	P-000052	METALLIC BLACK ZINC		

LESS FREQUENTLY OR OLD SURFACE FINISH CODES FOR PANELS

VITREOUS ENAMEL				VHT PAINT(Very High Temp)		POWDER COAT
E04	JASMINE	V01		SATIN BLACK HIGH TEMP	P01	BLUE/BLACK
					P04	GLOSS CHARCOAL
					P07	FLAT BLACK